PiMX8MP IO-Daughter Board Rev 0.1

26.04.2026
Status: R&D

Designed at Open Visions Technology - OV Tech GmbH
Mail to: info(at)open-visions(dot)com
LinkedIn: https://www.linkedin.com/company/ov-tech-gmbh
Web: http://www.open-visions.com/

Top Level Document

Disclaimer:
All project documents, including schematics and PCB layouts, are provided for informational purposes only. They have not been fully tested or validated and may contain errors or require modifications. Use at your own risk. No guarantees or warranties are provided.

M.2 2230 E-Key Con.

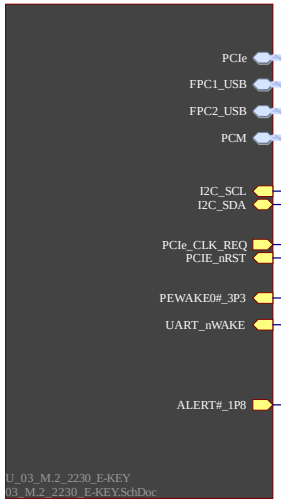

FPC Input connector

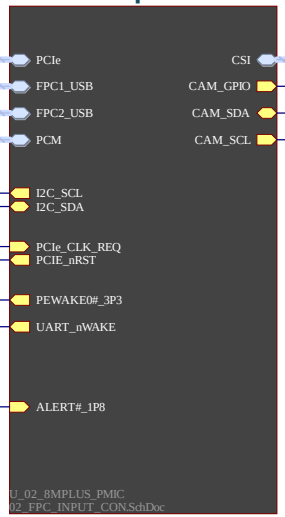

CSI Camera

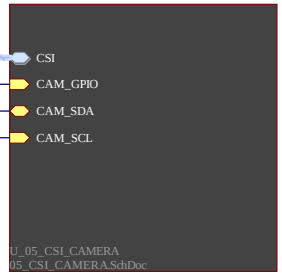

WIFI/BLE Antenna

Signal Level Indication

Border Color = 1.8V | Border Color = 3.3V | Border Color = Don´t care

Title:Block Diagram		
Date:26.04.2026	File:01_BLOCK_DIAGRAM.SchDoc	Revision: Rev. 0.1
Author:T. Ludemann	Checked by:	Status: RnD
License:CERN-OHL-S-2.0	Project: PiMX8MIODB_release.PrjPcb	
OV Tech GmbH - Open Visions Technology	Sheet: 1/5	Size: DINA2

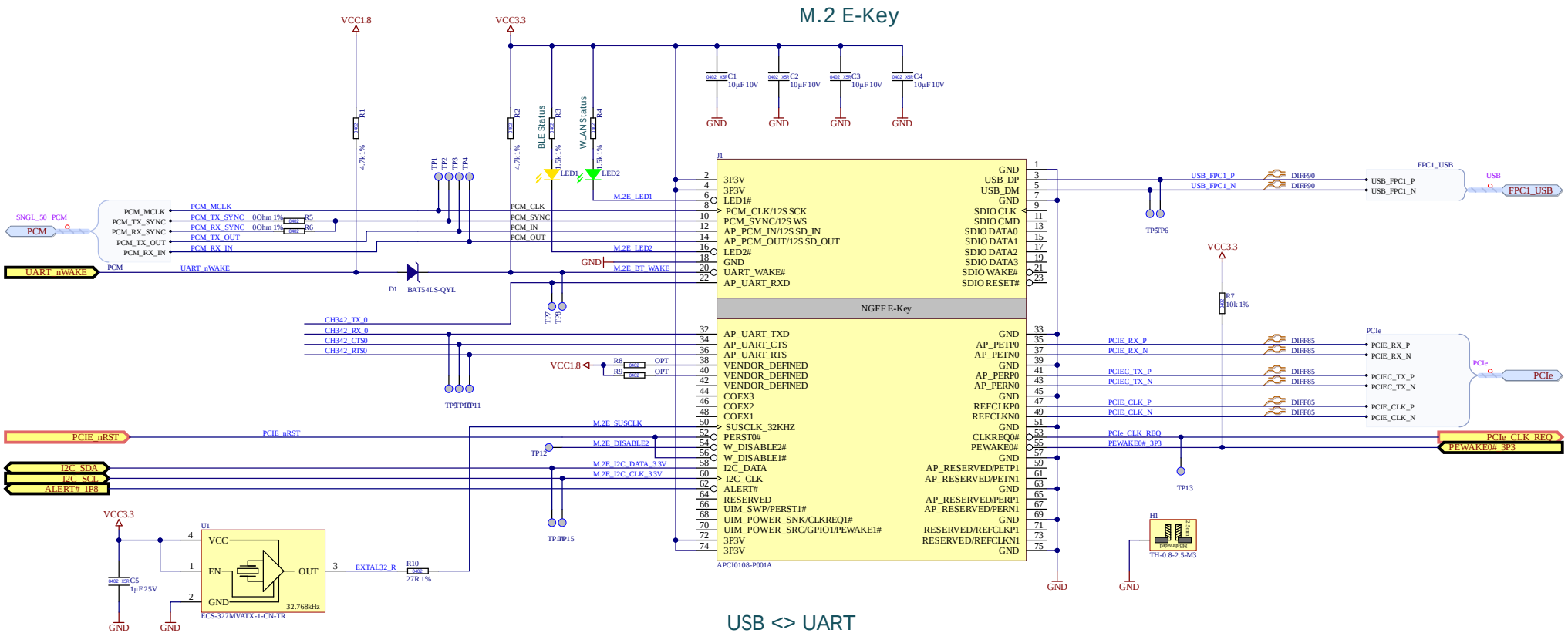

Title: M.2 2230 E-Key Connector		
Date: 26.04.2026	File: 03_M.2_2230_E-KEY.SchDoc	Revision: Rev. 0.1
Author: T. Ludemann	Checked by:	Status: RnD
License: CERN-OHL-S-2.0	Project: PiMX8MIODB_release.PrjPcb	
OV Tech GmbH - Open Visions Technology	Sheet: 2/5	Size: DINA3

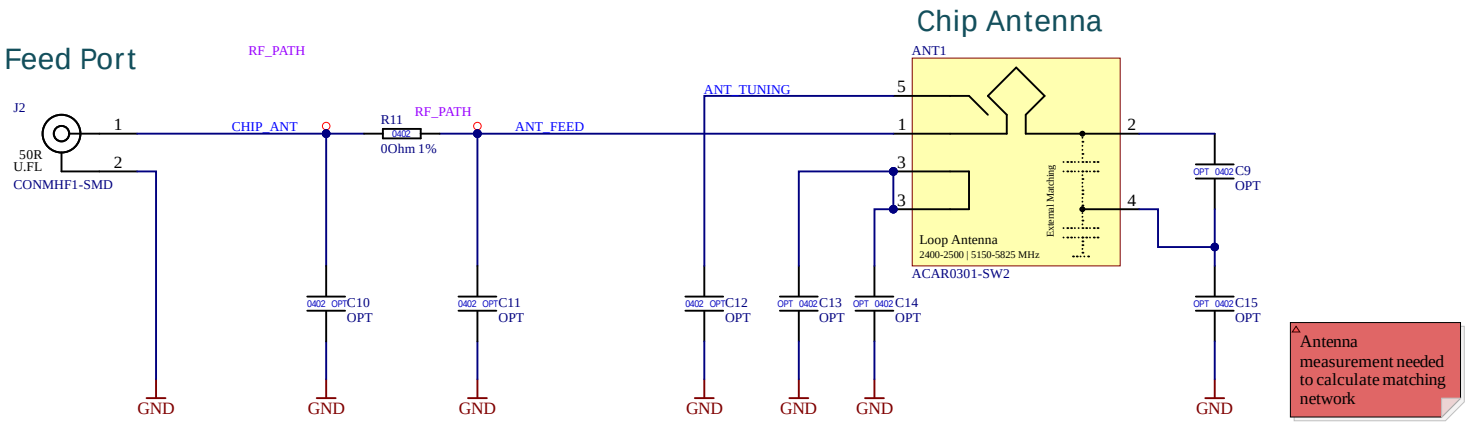

Signal Level Indication

Border Color = 1.8V | Border Color = 3.3V | Border Color = Don´t care

Title:WIFI/BLE Antenna		
Date:26.04.2026	File:04_WIFI_BLE_ANTENNA.SchDoc	Revision: Rev. 0.1
Author:T. Ludemann	Checked by:	Status: RnD
License:CERN-OHL-S-2.0	Project: PiMX8MIODB_release.PrjPcb	
OV Tech GmbH - Open Visions Technology	Sheet: 3/5	Size: DINA4

FPC Daughterboard connector

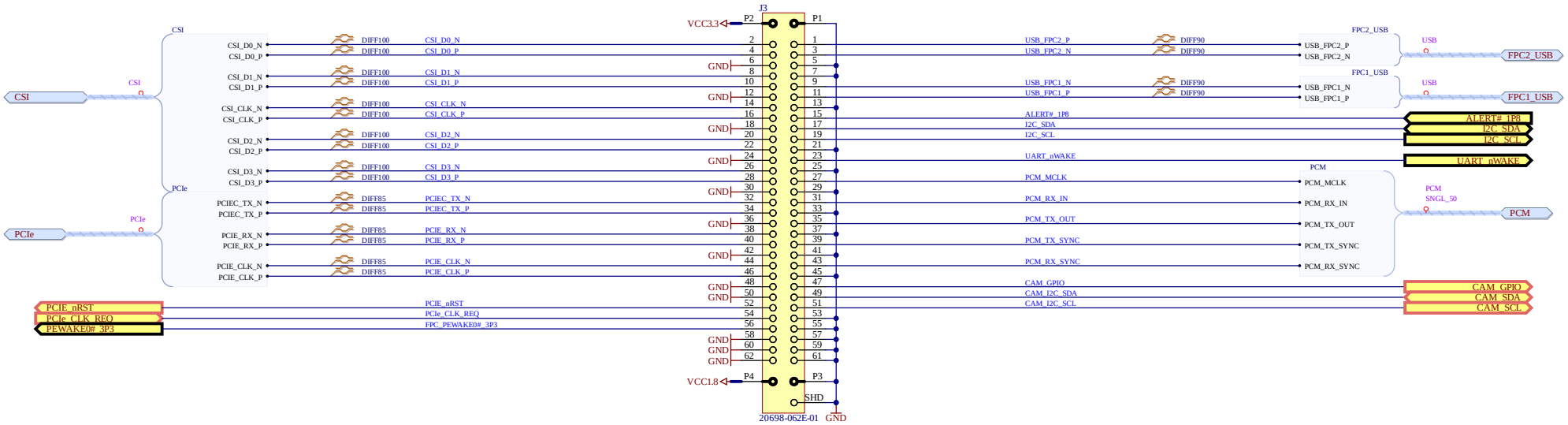

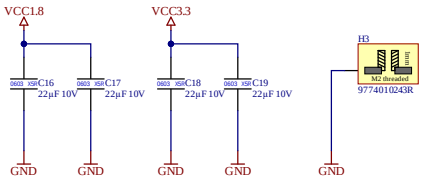

Signal Level Indication

Border Color = 1.8V | Border Color = 3.3V | Border Color = Don´t care

Title:FPC input connector		
Date:26.04.2026	File:02_FPC_INPUT_CON.SchDoc	Revision: Rev. 0.1
Author:*	Checked by:	Status: RnD
License:CERN-OHL-S-2.0	Project: PiMX8MIODB_release.PrjPcb	
OV Tech GmbH - Open Visions Technology	Sheet: 4/5	Size: DINA3

FPC Camera Connector

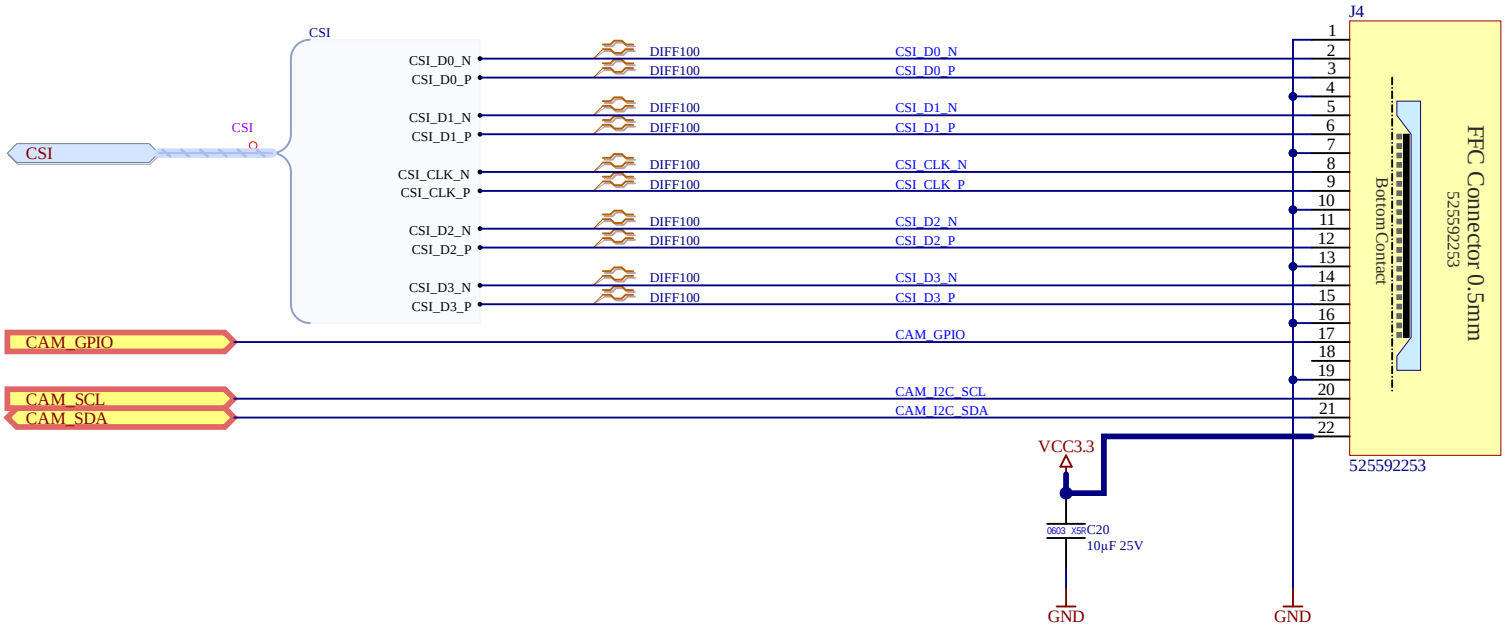

Signal Level Indication

Border Color = 1.8V | Border Color = 3.3V | Border Color = Don´t care

Title:MIP CSI Camera Connector		
Date:26.04.2026	File:05_CSI_CAMERA.SchDoc	Revision: Rev. 0.1
Author:T. Ludemann	Checked by:	Status: RnD
License:CERN-OHL-S-2.0	Project: PiMX8MIODB_release.PrjPcb	
OV Tech GmbH - Open Visions Technology	Sheet: 5/5	Size: DINA4